MOTORS FOR SCREWDRIVING APPLICATIONS WITH SLIP-TRK CLUTCH

ALGS FR SERIES - Non-reversible

WATT: 430 / CONSUMPTION: 600 Nl/1'

Data sheet
ALGS3D FR



1. 1/4" hexagonal bit holder connection
2. Grip zone
3. Air inlet
4. Air exhaust

Technical specification

Right rotation - Model	ALGS3D FR
Right rotation - Code	8604208
No-load speed - rpm/min	950
Torque Nm - Nm	6,5
Screws tightening	M4-M5
Clutch spring	Neutral
Clutch unit	7311143

Form features

Allow the tightening torque to be adjusted through a friction clutch.
Output shaft with axial sliding (3 mm), on request without scrolling.
Standard bit holder coupling 1⁄4" (6.35 mm).

MOTORS FOR SCREWDRIVING APPLICATIONS WITH SLIP-TRK CLUTCH

ALGS FR SERIES - Non-reversible

WATT: 430 / CONSUMPTION: 600 Nl/1'

Data sheet

ALGS3D FR

Overall dimensions

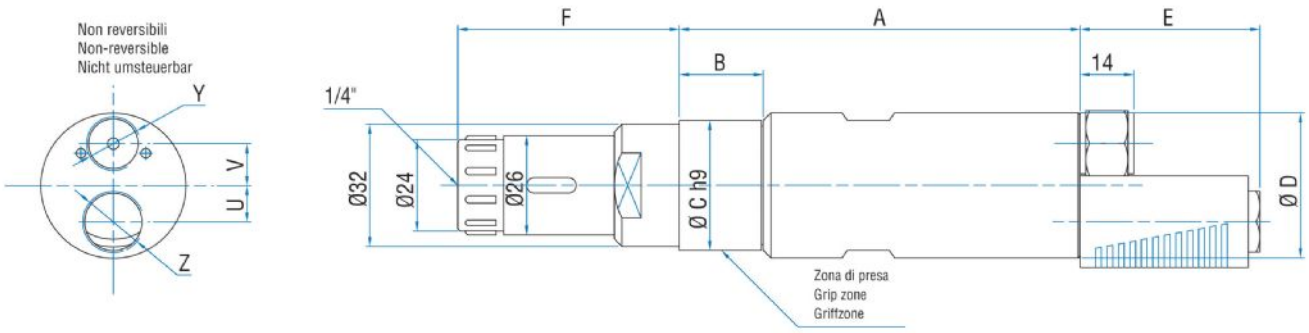

Model	Code	A	B	C	D	E	F	U	V	Y	Z
ALGS3D FR	8604208	143,5	54	40	42	47	56,9	11	13	1/4"	3/8"